इंटरनेट मानक

Disclosure to Promote the Right To Information

Whereas the Parliament of India has set out to provide a practical regime of right to information for citizens to secure access to information under the control of public authorities, in order to promote transparency and accountability in the working of every public authority, and whereas the attached publication of the Bureau of Indian Standards is of particular interest to the public, particularly disadvantaged communities and those engaged in the pursuit of education and knowledge, the attached public safety standard is made available to promote the timely dissemination of this information in an accurate manner to the public.

"जानने का अधिकार, जीने का अधिकार"
Mazdoor Kisan Shakti Sangathan
"The Right to Information, The Right to Live"

"पुराने को छोड नये के तरफ"
Jawaharlal Nehru
"Step Out From the Old to the New"

IS 15722 (2006): Road vehicles - Compressed natural gas (CNG) fuel system components - CNG Low-pressure flexible fuel line with end connections, CNG Fuel line having pressure not exceeding 2.15 Mpa (21.5 bar) [TED 26: Automotive vehicles on NCES]

"ज्ञान से एक नये भारत का निर्माण"
Satyanarayan Gangaram Pitroda
"Invent a New India Using Knowledge"

Act Number 22 of 2005
The Indian Parliament
RIGHT TO INFORMATION

Made Available By
Public.Resource.Org

"ज्ञान एक ऐसा खजाना है जो कभी चुराया नहीं जा सकता है"
Bhartṛhari—Nītiśatakam
"Knowledge is such a treasure which cannot be stolen"

BLANK PAGE

BRUTUM FULMEN

IGNORANTIA JURIS NON EXCUSAT

PROTECTED BY COPYRIGHT

भारतीय मानक

सड़क वाहन — संपीड़ित प्राकृतिक गैस (सीएनजी) ईंधन प्रणाली के घटक — सिरे कनेक्शन सहित सीएनजी निम्न-दाब नम्य ईंधन लाईन [2.15 मैगापास्कल (21.5 बार) से कम दाब की सीएनजी ईंधन लाईन]

Indian Standard

ROAD VEHICLES — COMPRESSED NATURAL GAS (CNG) FUEL SYSTEM COMPONENTS — CNG LOW-PRESSURE FLEXIBLE FUEL LINE WITH END CONNECTIONS [CNG FUEL LINE HAVING PRESSURE NOT EXCEEDING 2.15 MPa (21.5 BAR)]

ICS 43.060.40

© BIS 2006

BUREAU OF INDIAN STANDARDS
MANAK BHAVAN, 9 BAHADUR SHAH ZAFAR MARG
NEW DELHI 110002

December 2006 **Price Group 5**

FOREWORD

This Indian Standard was adopted by the Bureau of Indian Standards, after the draft finalized by the Automotive Vehicles Running on Non-conventional Energy Sources Sectional Committee had been approved by the Transport Engineering Division Council.

In the formulation of this standard considerable assistance has been derived from the following standards issued by the Automotive Research Association of India and SAE International respectively:

AIS 024 (Amd 4 to version 3) — Safety and procedural requirements for type approval of CNG operated vehicles

AIS 028 (Version 3) — Code of practice for use of CNG fuel in internal combustion engine vehicles

SAE J30 : 1998 — Fuel and oil hoses

This standard is one of the series of Indian Standards published on CNG onboard fuel system components. Other standards in this series are:

IS No.	*Title*
15710 : 2006	Road vehicles — Compressed natural gas (CNG) fuel system components — General requirements and definitions
15711 : 2006	Road vehicles — Compressed natural gas (CNG) fuel system components — Performance and general test methods
15712 : 2006	Road vehicles — Compressed natural gas (CNG) fuel system components — Automatic valve (solenoid valve)
15713 : 2006	Road vehicles — Compressed natural gas (CNG) fuel system components — Pressure regulator
15714 : 2006	Road vehicles — Compressed natural gas (CNG) fuel system components — Gas/air mixer
15715 : 2006	Road vehicles — Compressed natural gas (CNG) fuel system components — Conduit (ventilation hose)
15716 : 2006	Road vehicles — Compressed natural gas (CNG) fuel system components — CNG high pressure fuel line (rigid) with end connections [having pressure exceeding 2.15 MPa (21.5 bar)]
15717 : 2006	Road vehicles — Compressed natural gas (CNG) fuel system components — Petrol valve (automatic/manual)
15718 : 2006	Road vehicles — Compressed natural gas (CNG) fuel system components — CNG high pressure fuel line (flexible hose) with end connections [having service pressure exceeding 2.15 MPa (21.5 bar)]
15719 : 2006	Road vehicles — Compressed natural gas (CNG) fuel system components — Electrical wiring kit
15720 : 2006	Road vehicles — Compressed natural gas (CNG) fuel system components — Compartments/ sub-compartments
15721 : 2006	Road vehicles — Compressed natural gas (CNG) — Fire retardant material for seat, upholstery, roof and side lining
15723 : 2006	Road vehicles — Compressed natural gas (CNG) fuel system components — Current limiting devices

The composition of the Committee responsible for the formulation of this standard is given in Annex A.

For the purpose of deciding whether a particular requirement of this standard is complied with, the final value, observed or calculated, expressing the result of a test or analysis, shall be rounded off in accordance with IS 2 : 1960 'Rules for rounding off numerical values (*revised*)'. The number of significant places retained in the rounded off value should be the same as that of the specified value in this standard.

AMENDMENT NO. 1 SEPTEMBER 2012
TO
IS 15722 : 2006 ROAD VEHICLES — COMPRESSED NATURAL GAS (CNG) FUEL SYSTEM COMPONENTS — CNG LOW-PRESSURE FLEXIBLE FUEL LINE WITH END CONNECTIONS
[CNG FUEL LINE HAVING PRESSURE NOT EXCEEDING 2.15 MPa (21.5 BAR)]

(*First cover page*, *page*1, *title*) — Delete the words ‘Low-pressure’.

(*Page* 1, *clause* **1.1**, *line* 2) — Delete the words ‘low-pressure’.

(*Page* 1, *clause* **4.1**, *line* 1) — Delete the words ‘low-pressure’.

(*Page* 2, *clauses* **5**, *heading*) — Substitute ‘FLEXIBLE’ for ‘LOW PRESSURE’.

(*Page* 2, *clause* **5.1**) — Substitute the following for the existing clause:

‘**5.1 Hydrostatic Strength**

Flexible fuel line shall be tested for hydrostatic strength test as per **5** of IS 15711. Test pressure shall be 4 times of the working pressure’.

(*Page* 2, *clause* **5.2**) — Delete and renumber the subsequent clauses.

(*Page* 2, *clause* **5.3**, *lines* 5 *and* 9) — Substitute ‘915mm’ *for* ‘1m’ *and* ‘30s’ *for* ‘60s’.

(*Page* 3, *tables* **1, 2** *and* **3**, *table heading*) — Substitute ‘Flexible’ *for* ‘Low-pressure’.

(*Page* 6, *clause* **6.1**) — Substitute the following for the existing:

'**6.1** Each flexible fuel line shall be legibly and indelibly marked with the following at every 300mm length:

a) Manufactures name, trade-mark or symbol,
b) Part No. or unique identification mark,
c) Type and class;
d) Size;
e) Working pressure;
f) Batch number; and
g) CNG'.

[*Page 8, clause* **9**(h)] — Substitute the following for the existing:

'h) Drawings with relevant dimensions and materials'

(TED 26)

Reprography Unit, BIS, New Delhi, India

Indian Standard

ROAD VEHICLES — COMPRESSED NATURAL GAS (CNG) FUEL SYSTEM COMPONENTS — CNG LOW-PRESSURE FLEXIBLE FUEL LINE WITH END CONNECTIONS [CNG FUEL LINE HAVING PRESSURE NOT EXCEEDING 2.15 MPa (21.5 BAR)]

1 SCOPE

1.1 This standard specifies definitions, test methods and requirements of CNG low-pressure flexible fuel line with end connections of CNG onboard fuel system component having service pressure not exceeding 2.15 MPa (21.5 Bar), intended for use on motor vehicles defined in IS 14272 (Part 1), two wheelers and construction equipment vehicles (CEV).

1.1.1 This standard is applicable to CNG fuel system components intended to use on vehicles using compressed natural gas (mono-fuel or bi-fuel applications).

1.1.2 It is not applicable to the following:

a) Liquefied natural gas (LNG) fuel system components located upstream of, and including, the vapourizer;

b) Fuel containers;

c) Stationary gas engines; and

d) CNG fuel systems components for the propulsion of marine craft.

1.1.3 This standard is based upon a service pressure for compressed natural gas as a fuel at 20 MPa (200 Bar) settled at 15°C. Other service pressures could be accommodated by adjusting the pressure by the appropriate factor (ratio). For example, a 25 MPa (250 Bar) service pressure system will require pressures to be multiplied by 1.25. All references to pressure are to be considered gauge pressures unless otherwise specified.

2 REFERENCES

The following standards contain provisions, which, through reference in this text, constitute provisions of this standard. At the time of publication the editions indicated were valid. All standards are subject to revision and parties to agreements based on this standard are encouraged to investigate the possibility of applying the most recent editions of the standards indicated below:

IS No.	*Title*
3400	Methods of test for vulcanized rubbers:
(Part 1) : 1987	Tensile stress strain properties (*second revision*)
(Part 4) : 1987	Accelerated ageing (*second revision*)
(Part 6) : 2005/ ISO 1817 : 1999	Determination of the effect of liquids (*second revision*)
(Part 20) : 1994/ ISO 1431-1 : 1989	Resistance to ozone cracking — Static strain test
14272 (Part 1) : 1995	Automotive vehicles — Types — Terminology: Part 1 Three and four wheelers
15710 : 2006	Road vehicles — Compressed natural gas (CNG) fuel system components — General requirements and definitions
15711 : 2006	Road vehicles — Compressed natural gas (CNG) fuel system components — Performance and general test methods

3 DEFINITIONS

For the purpose of this standard the definitions those given in IS 15710 shall apply.

4 CLASSIFICATION

4.1 CNG low-pressure flexible fuel lines are classified into following three classes:

a) *Class* 1 — Hose suitable for use in temperature up to 100°C,

b) *Class* 2 — Hose suitable for use in temperature up to 125°C, and

c) *Class* 3 — Hose suitable for use in temperature up to 150°C intermittently and 135°C continuously.

4.2 Depending upon the service pressure the pipes are classified into following two types:

a) *Type* 1 — Hose having service pressure not exceeding 100 kPa (1 bar), and

b) *Type* 2 — Hose having service pressure exceeding 100 kPa (1 bar) and less than 2.15 MPa (21.5 bar).

5 REQUIREMENTS OF CNG LOW PRESSURE FUEL LINE

5.1 All CNG fuel lines of Type 1 (*see* **4.2**) shall withstand 5 times the working pressure and shall comply with the requirements given in Tables 1, 2 and 3.

5.2 All CNG fuel lines of Type 2 (*see* **4.2**) shall withstand a minimum burst pressure of 4.8 MPa and shall comply with the requirements given in Tables 1, 2 and 3.

5.3 Vacuum Collapse Test

Hoses having sizes less than 12.70 mm ID shall be subjected to 81 kPa vacuum. Size 12.70 mm to 25.40 mm ID shall be subjected to 34 kPa vacuum. This requirement shall not apply to sizes larger than 25.40 mm ID. During the vacuum test a 1 m length of hose assembly shall be held in a straight line, and diameter shall not decrease by more than 20 percent during application of vacuum for a minimum of 15 s and not more than 60 s. The vacuum collapse test shall be performed on the finished parts.

5.4 Cold Flexibility

For straight hose 19.05 mm ID and under, two samples of whole hose shall be used. One sample shall be immersed in Oil No. 3 [*see* IS 3400 (Part 6)] for 70 h at required temperature (*see* Tables 1 to 3) and one shall be used as unaged. The unaged sample shall be conditioned at – 40 ±2°C for 5 h and then flexed in cold chamber through 180° from centreline to a diameter of 10 times the maximum OD of hose. The aged sample shall be conditioned at required temperature (*see* Tables 1 to 3) for 5 h and then shall be flexed in cold chamber through 180° from centreline to a diameter of 10 times the maximum OD of hose. The flexing shall take place within 4 s and the hose shall not fracture or show any cracks, checks, and breaks in tube or cover. Proof pressure of 0.68 MPa may be applied to determine tube damage.

For straight hose above 19.05 mm ID and all preformed hose, six specimens of 100 × 6 mm from whole hose wall shall be prepared. One set of 3 shall be unaged and other shall be aged in Oil No. 3 [*see* IS 3400 (Part 6)] for 70 h at required temperature (*see* Tables 1 to 3). The unaged set shall be conditioned at – 40 ±2°C for 5 h in an unrestrained loop positioned between 2 jaws 50.8 mm wide and 63.5 mm apart. The aged samples shall be conditioned for 5 h at required cold temperature (*see* Tables 1 to 3) in an unrestrained loop positioned between two jaws 50.8 mm wide and 63.5 mm apart.

While still in cold chamber, the jaws shall be brought together as rapidly as possible until 25.40 mm apart. The specimens shall not fracture nor show any cracks, checks, or breaks.

5.5 Tensile Strength and Elongation

When tested as per IS 3400 (Part 1) tensile strength and elongation at break on tube and cover of hose shall be as given below:

Tensile strength of cover	: 7.0 MPa, *Min*
Tensile strength of tube	: 8.0 MPa, *Min*
Elongation at break of tube and cover	: 200 percent, *Min*

5.6 Dry Heat Resistance

When tested for resistance to dry heat of tube (lining) and cover as per IS 3400 (Part 4) with conditions and requirements specified in Tables 1 to 3 for 70 h, the reduction in tensile strength and elongation of specimens taken from the tube and cover shall not exceed the values as shown in Tables 1 to 3.

5.7 Fuel Resistance

After 48 h immersion at room temperature, 23 ± 2°C in reference fuel C (50 Toluene –50 iso-octane percent by volume), physical values of specimens taken from the tube shall not exceed the change in values listed in Tables 1 to 3.

5.8 Oil Resistance

When tested as per IS 3400 (Part 6) for 70 h immersion at the required temperature (*see* Tables 1 to 3) in Oil No. 3, physical values of specimens taken from the tube and cover shall not exceed the values listed in Tables 1 to 3.

5.9 Test for Extractable in Hose

5.9.1 *Apparatus and Reagents*

a) Reference Fuel C (50 Toluene –50 iso-octane percent by volume),

b) Methanol 99 percent minimum purity,

c) Gooch crucible,

d) Glass fibre filter, Grade 934 AH,

e) Beaker,

f) Heating unit, and

g) Metal control rod and end plugs (*see* Fig. 1 and Table 4).

Table 1 Requirements for CNG Low-Pressure Fuel Lines (Class 1)

(*Clauses* 5.1 *and* 5.2)

Specification	Cold Flex	Dry Heat Resistance	Fuel Resistance	Oil Resistance	Extractable g/m²	Permeation *Max* Rate/24 h
(1)	(2)	(3)	(4)	(5)	(6)	(7)
Ageing temperature, °C	100	100	23	100	—	—
Cold temperature, °C	–34	—	—	—	—	—
Tube						
Tensile change, percent	—	–20	–45	–40	—	—
Elongation change, percent	—	–50	–45	–40	—	—
Volume change, percent	—	—	0 to + 50	–5 to +25	—	—
Cover						
Tensile change, percent	—	–20	—	—	—	—
Elongation change, percent	—	–50	—	—	—	—
Volume change, percent	—	—	—	0 to +100	—	—
Extractable	—	—	—	—	7.75	—
Permeation — Fuel C, 8 Days total, g/m²	—	—	—	—	—	600

Table 2 Requirements for CNG Low-Pressure Fuel Lines (Class 2)

(*Clauses* 5.1 *and* 5.2)

Specification	Cold Flex	Dry Heat Resistance	Fuel Resistance	Oil Resistance	Extractable g/m²	Permeation *Max* Rate/24 h
(1)	(2)	(3)	(4)	(5)	(6)	(7)
Ageing Temperature, °C	125	125	23	125	—	—
Cold Temperature, °C	–34	—	—	—	—	—
Tube						
Tensile change, percent	—	–20	–45	–50	—	—
Elongation change, percent	—	–60	–45	–50	—	—
Volume change, percent	—	—	0 to + 50	–5 to +30	—	—
Cover						
Tensile change, percent	—	20	—	—	—	—
Elongation change, percent	—	60	—	—	—	—
Volume change, percent	—	—	—	0 to +75	—	—
Extractable	—	—	—		5.00	
Permeation — Fuel C, 8 Days total, g/m²	—	—	—	—	—	550

Table 3 Requirements for CNG Low-Pressure Fuel Lines (Class 3)

(*Clauses* 5.1 *and* 5.2)

Specification	Cold Flex	Dry Heat Resistance	Fuel Resistance	Oil Resistance	Extractable g/m²	Permeation *Max* Rate/24 h
(1)	(2)	(3)	(4)	(5)	(6)	(7)
Ageing temperature, °C	150	150	23	150	—	—
Cold temperature, °C	–40	—	—	—	—	—
Tube						
Tensile change, percent	—	–25	–35	–20	—	—
Elongation change, percent	—	–50	–35	–50	—	—
Volume change, percent	—	—	0 to + 35	–5 to +15	—	—
Cover						
Tensile change, percent	—	–25	—	—	—	—
Elongation change, percent	—	–50	—	—	—	—
Volume change, percent	—	—	—	0 to +15	—	—
Extractable	—	—	—	—	2.50	—
Permeation — Fuel C, 8 Days total, g/m²	—	—	—	—	—	200

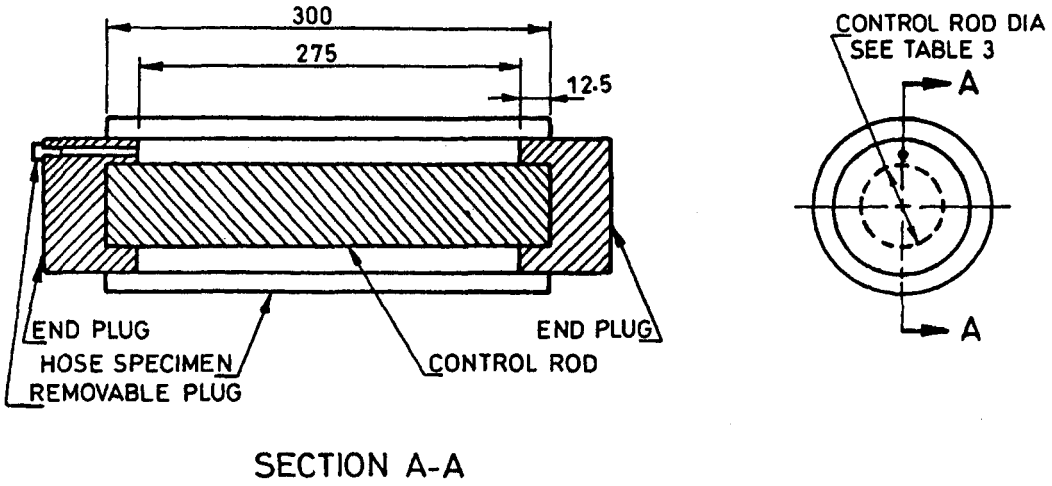

All dimensions in millimetres.

FIG. 1 METAL CONTROL ROD AND END PLUGS

Table 4 Control Rod Dimensions

[*Clause* 5.9.1(g)]

Hose Size (Nominal ID) mm	Control Rod Diameter mm
Below 19.05	N/A
19.05	7.8
25.40	15.5
31.75	22.4
34.92	25.9
38.10	29.1
44.45	35.6
50.80	42.1
57.35	48.6
63.50	55.0

5.9.2 *Specimens*

Hose under test shall be 300 mm long plugged at both ends with metal, aluminum or steel, plugs to retain the fluid. Calculate inside surface area based on the actual insider diameter of the hose for its total effective length.

NOTES

1 Total effective length of hose with end plugs inserted shall be 275 mm.

2 A round metal (aluminum or steel) control rod conforming to the dimensions shown in Table 4 for hose sizes 19.05 mm ID and larger shall be inserted into hose ID as shown in Fig. 1. The rod shall be positioned in the end plugs that it will not contact the hose ID.

5.9.3 *Procedure*

a) Record hose actual inside diameter, length and inside surface area. Preferred method is with plug ID gauges to nearest 0.025 mm.

b) Fill hose with reference fuel C.

c) Allow to stand for 24 h at temperature of 23 ± 2°C with both ends sealed.

d) Drain fluid from hose into a tared beaker.

e) Rinse inside of the specimen with an amount of fresh reference fuel C approximately equal to the volume of the original filling and add to the original extraction.

f) Remove solvent by evaporation by heating at 80 to 95°C until no fuel odour is detectable and then store sample at room temperature of 23 ± 2°C under a fume hood for a minimum of 16 h.

g) Take up residue with 30 ml of room temperature, 23 ± 2°C methanol.

h) Filter this solution on the tared crucible, rinsing beaker twice with 10 ml of room temperature, 23 ± 2°C methanol.

j) Place crucible in beaker and dry in a 65 to 90°C oven to insure complete evaporation of methanol.

k) Weigh the gooch crucible and tared beaker and determine mass of extractable expressed as g/m² using surface area of hose in contact with reference fuel C.

m) Value of total g/m² shall be values shown in Tables 1 to 3.

NOTE — Solubility of waxy hydrocarbons is affected by temperature.

5.10 Ozone Resistance Test

The test shall be carried out in accordance with IS 3400 (Part 20).

For straight hose, 25.40 mm ID and under, a specimen of hose of sufficient length shall be bent around a mandrel with OD 8 times the nominal OD of the specimen. The two ends shall be tied at their crossing

with enamelled copper or aluminum wire. After mounting, the specimen shall be allowed to rest in an ozone free atmosphere for 24 h at room temperature of 23 ± 2°C. The mounted specimen shall be placed in a test chamber with ozone concentration of 100 ± 5 MPa at a temperature of 40 ± 2°C. After 70 h of exposure, the specimen shall be removed and allowed to cool to a temperature of 23 ± 2°C and then inspected. The specimen shall be visually inspected under 7 × magnification and must meet '0' rating except for the area immediate adjacent to the wire, which shall be ignored. For hoses over 25.40 mm ID and preformed parts, prepare a specimen by cutting a strip of whole hose 12.70 mm wide by 100 mm long and tie the specimen (cover out) around a 12.70 mm diameter mandrel. Condition in the same manner as for whole hose and apply the same requirements. The test applies to the cover only and cracks in the exposed tube or cut edges of the cover shall be ignored.

5.11 Adhesion Test

The minimum load required to separate a 25.40 mm width of tube and cover shall be 27 N.

5.12 Kink Resistance Test

When tested to the following procedure, a ball having a diameter equal to half the nominal inside diameter of the hose shall pass freely through the hose. Use fixture consisting of a 19 mm thick board or plate with holes and centre distances shown in Table 5.

Condition a 300 mm long specimen of hose for 2 h at room temperature, 23 ± 2°C. Insert one end of hose into board with end flush with opposite side of the board. Carefully bend hose along its natural curvature and insert the other end carefully into the second hole until it projects 63 mm out the other side. After hose has been in this position for 5 min, insert a steel ball having a diameter equal to half the hose nominal ID. The ball must pass freely from one end to the other.

Table 5 Kink Resistance

Sl No.	Nominal Hose ID mm	Hole Center Distance mm	Hole Diameter mm
(1)	(2)	(3)	(4)
i)	4.76	12.7	12.7
ii)	6.35	19.0	14.3
iii)	7.94	25.4	15.9
iv)	9.53	76.2	19.0
v)	12.70	127.0	23.0

5.13 Rate of Fuel Permeation

A hose of free length of 1 m shall be connected to a container filled with fuel C having a temperature of 23 ± 2°C. The test shall be carried out in compliance with the reservoir method described in **5.13.1**. The hose shall meet the limits listed in Tables 1 to 3.

5.13.1 *Unified Method for Hose Permeation*

5.13.1.1 *Rate of fuel permeation*

Hoses tested by the reservoir method shall meet those limits listed in Tables 1 to 3 when tested with reference fuel C. Exposure of these hoses to gasoline or diesel fuel which contain high levels, greater than 5 percent by volume, of oxygenates, that is, ethanol, methanol, or MTBE (methyl tertiary butyl ether), may result in significantly higher permeation rates than those listed in Tables 1 to 3.

a) *Reservoir units (see Table 6 for size of reservoir)* — A screw-top can may be modified by the addition of a standard hose nipple, or fitting, cold soldered into the base at the corner opposite its opening (*see* Fig. 2 for typical equipment). Other types of reservoir units may be used. Examples are cylindrical aluminum and steel containers with appropriate standard hose nipples at one end, and a fill opening if required at the other end. The materials used for construction of the reservoirs shall be compatible with the test fuel.

b) *Screw cap* — A metal foil or fluroelastomer-lined cap to seal the reservoir unit. Where the threaded fill opening is designed to seal with an O-ring, a fluroelastomer O-ring shall be used. The threaded fill opening may be either a female or male thread and sealed with a threaded male plug or female cap.

c) *Scale or balance* — A weighing unit with sufficient capacity to weigh the filled assemblies, and with a resolution of ± 0.01 g.

d) *Impermeable plug* — An impermeable plug of sufficient size to seal one end of hose to a depth of 25 mm.

e) *Hose clamps* — Standard hose clamps of the correct size for the hose being tested.

5.13.2 *Procedure*

a) Cut hose to the required length (active length plus the fitting lengths), *(see* Table 6).

b) Measure the inside diameter of the hose and record in mm.

c) Plug one end of hose to the required depth using an impermeable plug and hose clamp.

d) Attach the other end of hose to the fitting on the reservoir and clamp.

e) Measure the active or exposed length of the installed hose in mm and record.

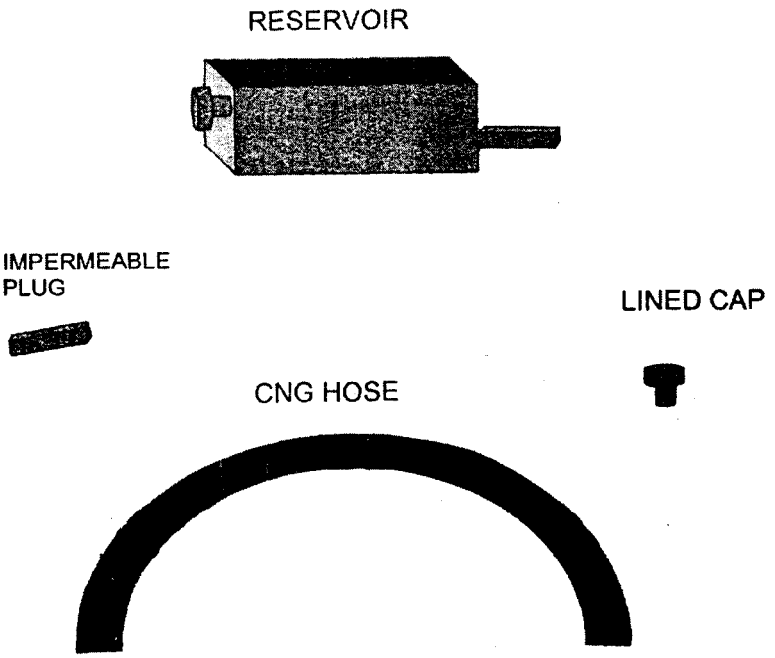

FIG. 2 FUEL PERMEATION TEST APPARATUS

Table 6 Test Piece Size Parameters

[*Clauses* 5.13.1.1(a) *and* 5.13.2(a)]

Sl No.	Inside Diameter of Test Hose mm	Active Length of Test Hose mm	Reservoir Size ml	Fuel Fill Amount ml
(1)	(2)	(3)	(4)	(5)
i)	≤ 16.0	300	460-490	300
ii)	> 16.0 to 25.0	300	940-1 000	750
iii)	> 25.0 to 32.0	300	3 750-4 000	2 500
iv)	> 32.0	150	3 750-4 000	2 500

NOTES

1 Storage location should be temperature controlled to 23 ± 2°C with free-flowing air to prevent fume build-up.

2 If weekend weighing are to be eliminated and the results averaged for the weekends, then the test must be started on a Monday.

f) Fill the reservoir with the specified amount (*see* Table 6) of desired fuel blend.

g) Seal reservoir with cap or plug.

h) Weigh reservoir assembly to the nearest 0.01 g and record.

j) To insure complete filling of the hose, orient assembly vertically and gently tap hose to eliminate the possibility of trapped air in the hose (*see* Fig. 3).

k) Place assembly with the hose horizontal in its storage position for liquid permeation (*see* Fig. 4).

m) Weigh the assembly each 24 ± 0.5 h for the required time interval and record each value.

n) After each weighing, invert assembly to drain hose, gently mix fuel and refill hose as in step (j) and replace in storage position.

p) Calculate the exposed tube area (A) in m^2: $A = L\,(mm) \times ID\,(mm) \times 3.14 \times 10^{-6}$.

q) Calculate the rate of fuel permission in terms of $g/m^2/24$ h of exposed tube area on a daily basis.

6 MARKING

6.1 Each flexible hose assembly shall be permanently and clearly marked with the following details after each 300 mm length:

a) Manufactures name, trade-mark or symbol;

b) Part No. or unique identification mark;

c) Type and class;

d) Size;

e) Working pressure;

f) Batch number;

g) CNG; and

h) IS No. of this standard.

6.2 BIS Certification Marking

Each flexible hose assembly may also be marked with the Standard Mark.

6.2.1 The use of the Standard Mark is governed by

FIG. 3 FUEL PERMEATION TEST — AIR BUBBLE REMOVAL

FIG. 4 FUEL PERMEATION RESERVOIR TEST ASSEMBLY

the provisions of the *Bureau of Indian Standards Act*, 1986 and the Rules and Regulations made thereunder. The details of conditions under which the licence for the use of the Standard Mark may be granted to manufacturers or producers may be obtained from the Bureau of Indian Standards.

7 TYPE TEST (TYPE APPROVAL)

For the purpose of type test CNG fuel lines of a particular Type/Class shall conform to all the test requirements as specified in this standard.

8 ACCEPTANCE TEST (CONFORMITY OF PRODUCTION)

CNG fuel line approved under this standard shall be so manufactured as to conform following test requirements as specified in relevant clauses of this standard.

a) Burst test,
b) Ozone resistance test,
c) Cold flexibility test,
d) Adhesion test, and
e) Rate of fuel permeation.

9 TECHNICAL INFORMATION TO BE SUBMITTED BY THE COMPONENT MANUFACTURER

Technical information to be submitted by the component manufacturer for component type approval/type test shall contain at least following information:

a) Name of the hose manufacturer,
b) Manufacturing plant address,
c) Part number,
d) Type and class of pipe (*see* **4**),
e) Hose inner diameter (ID),
f) Hose outer diameter (OD),
g) Working pressure, and
h) *Drawings* — Detailed dimensional drawings of the component in A3 size in duplicate shall contain drawing number, revision No., Part No., class, operating pressure, bill of material (comprising generic name and compound number for non-metallic parts used in the hose) and details of the marking on the component with proper authentication.

10 NUMBER OF SAMPLES FOR TESTING

Minimum 8 numbers of 500 mm length hose with end connections having preferably BSP threading shall be submitted to the test agency for testing.

ANNEX A

(*Foreword*)

COMMITTEE COMPOSITION

Automotive Vehicles Running on Non-conventional Energy Sources Sectional Committee, TED 26

Organization	*Representative(s)*
In personal capacity (*D-35, Hauz Khas, New Delhi 110016*)	SHRI B. BHANOT (***Chairman***)
Ashok Leyland Ltd, Chennai	SHRI NIRMAL KUMAR SHRI G. VISWANATHAN (*Alternate*)
Automotive Research Association of India, Pune	SHRI M. K. CHOUDHARI SHRI A. B. KOMAWAR (*Alternate*)
Bajaj Auto Ltd, Pune	SHRI TAPAN BASU SHRI T. M. BALARAMAN (*Alternate*)
Batra Associates Limited, Faridabad	SHRI N. K. SAWHNEY
Bharat Heavy Electicals Ltd, Bangalore	SHRI J. B. D'SOUZA SHRI P. S. CHOPRA (*Alternate*)
Bharat Petroleum Corporation Ltd, Mumbai	SHRI R. N. DAS SHRI N. DASGUPTA (*Alternate*)
Bombay Environmental Action Group, Mumbai	SHRI DEBI GOENKA
Central Institute of Road Transport, Pune	SHRI G. K. SHARMA SHRI D. P. SASTE (*Alternate*)
Central Pollution Control Board, Delhi	SHRI T. VENUGOPAL SHRI RAJESH DEBROY (*Alternate*)
Centre for Science and Environment, New Delhi	SHRIMATI ANUMITA ROY SHRI CHIRAG SHAH (*Alternate*)
Force Motors Ltd, Pune	SHRI S. B. PETHE SHRI S. V. VIDHWANS (*Alternate*)
GAIL (India) Limited, New Delhi	SHRI S. P. SHARMA SHRI RANVEER SINGH (*Alternate*)
Gujarat Gas Company Limited, Surat	SHRI M. I. VAKHARWALA SHRI B. D. JOSHI (*Alternate*)

Organization	*Representative(s)*
Hindustan Motors Ltd, Sagore	SHRI S. Y. RAO RTV-ENGG (GENERAL) (*Alternate*)
Indian Institute of Petroleum, Dehradun	DR MUKESH SAXENA SHRI A. K. AIGAL (*Alternate*)
Indraprastha Gas Ltd, New Delhi	SHRI P. S. BHARGAVA SHRI B. K. NATH (*Alternate*)
Mahanagar Gas Ltd, Mumbai	SHRI R. S. PRABHU SHRI A. UDEY KIRAN (*Alternate*)
Mahindra & Mahindra Ltd, Nasik	SHRI Z. A. MUJAWAR SHRI K. V. N. PRASAD (*Alternate*)
Minda Impco Ltd, New Delhi	SHRI SHISHIR AGRAWAL SHRI GAGAN AGRAWAL (*Alternate*)
Ministry of Non-conventional Energy Sources, New Delhi	DIRECTOR
Petroleum & Explosives Safety Organization, Nagpur	SHRI A. N. BISWAS SHRI C. R. SURENDRANATHAN (*Alternate*)
Reliance Industries Limited, Navi Mumbai	SHRI N. S. MURTHY SHRI RAVI V. DESAI (*Alternate*)
Reva Electric Car Co (Pvt) Ltd, Bangalore	SHRI CHETAN MAINI
Rutu Auto Gas Pvt Ltd, Ahmedabad	SHRI RAJESH KOTHARI
Sagas Autotech Pvt Ltd, Mysore	SHRI SANDEEP S. P. SHRI SANJAY SHYAMANUR P. (*Alternate*)
Scooters India Ltd, Lucknow	SHRI N. K. TRIVEDI SHRI B. K. MAITIN (*Alternate*)
Shri Shakti LPG Ltd, Hyderabad	SHRI JAYA PRAKASH RAMAPPA SHRI CHALAPATHY RAO (*Alternate*)
Society for Alternate Fuels Aftermarket Conversion, New Delhi	SHRI SANJAY GAMBHIR SHRI R. P. KHURANA (*Alternate*)
Society of Indian Automobile Manufacturers, New Delhi	SHRI K. K. GANDHI MS PAMELA TIKKU (*Alternate*)
Tata Motors Ltd, Pune	DR KRISHNA IYENGAR SHRI P. K. BANERJEE (*Alternate*)
Transenergy Ltd, Chennai	DR K. SRIDHARA SHRI A. GOPALAKRISHNAN (*Alternate*)
TVS Suzuki Ltd, Hosur	CAPT N. S. MOHAN RAM
Vanaz Engineers Ltd, Pune	SHRI S. R. SARVATE SHRI S. J. VISPUTE (*Alternate*)
Vehicle Research & Development Establishment, Ahmednagar	SHRI K. KAMRAJ SHRI K. S. JAIN (*Alternate*)
In personal capacity (*D-606, Vashi Plaza, Sector 17, Vashi, Navi Mumbai 400705*)	SHRI ALOK CHANDRA GUPTA
BIS Directorate General	SHRI P. C. JOSHI, Scientist 'E' and Head (TED) [Representing Director General (*Ex-officio*)]

Member Secretary
SHRI P. S. MUJRAL
Scientist 'E' (TED), BIS

Bureau of Indian Standards

BIS is a statutory institution established under the *Bureau of Indian Standards Act*, 1986 to promote harmonious development of the activities of standardization, marking and quality certification of goods and attending to connected matters in the country.

Copyright

BIS has the copyright of all its publications. No part of these publications may be reproduced in any form without the prior permission in writing of BIS. This does not preclude the free use, in the course of implementing the standard, of necessary details, such as symbols and sizes, type or grade designations. Enquiries relating to copyright be addressed to the Director (Publications), BIS.

Review of Indian Standards

Amendments are issued to standards as the need arises on the basis of comments. Standards are also reviewed periodically; a standard along with amendments is reaffirmed when such review indicates that no changes are needed; if the review indicates that changes are needed, it is taken up for revision. Users of Indian Standards should ascertain that they are in possession of the latest amendments or edition by referring to the latest issue of 'BIS Catalogue' and 'Standards: Monthly Additions'.

This Indian Standard has been developed from Doc: No. TED 26 (604).

Amendments Issued Since Publication

Amend No.	Date of Issue	Text Affected

BUREAU OF INDIAN STANDARDS

Headquarters:

Manak Bhavan, 9 Bahadur Shah Zafar Marg, New Delhi 110002
Telephones: 2323 0131, 2323 3375, 2323 9402 *website* : www.bis.org.in

Regional Offices:		**Telephones**
Central	: Manak Bhavan, 9 Bahadur Shah Zafar Marg NEW DELHI 110002	2323 7617 2323 3841
Eastern	: 1/14 C.I.T. Scheme VII M, V.I.P. Road, Kankurgachi KOLKATA 700054	2337 8499, 2337 8561 2337 8626, 2337 9120
Northern	: SCO 335-336, Sector 34-A, CHANDIGARH 160022	260 3843 260 9285
Southern	: C.I.T. Campus, IV Cross Road, CHENNAI 600113	2254 1216, 2254 1442 2254 2519, 2254 2315
Western	: Manakalaya, E9 MIDC, Marol, Andheri (East) MUMBAI 400093	2832 9295, 2832 7858 2832 7891, 2832 7892

Branches : AHMEDABAD. BANGALORE. BHOPAL. BHUBANESHWAR. COIMBATORE. FARIDABAD. GHAZIABAD. GUWAHATI. HYDERABAD. JAIPUR. KANPUR. LUCKNOW. NAGPUR. NALAGARH. PATNA. PUNE. RAJKOT. THIRUVANANTHAPURAM. VISAKHAPATNAM.

Printed at Simco Printing Press, Delhi